Tel: +48 58 732 71 62
Fax: +48 58 732 71 64
info@automotive-connectors.pl

PART NO.:	891506
Material:	Copper Alloys/Stainless
MALE / FEMALE:	MALE
Sealed / Unsealed:	Without
Wire Range:	0,25~2
Quantity per package:	6000
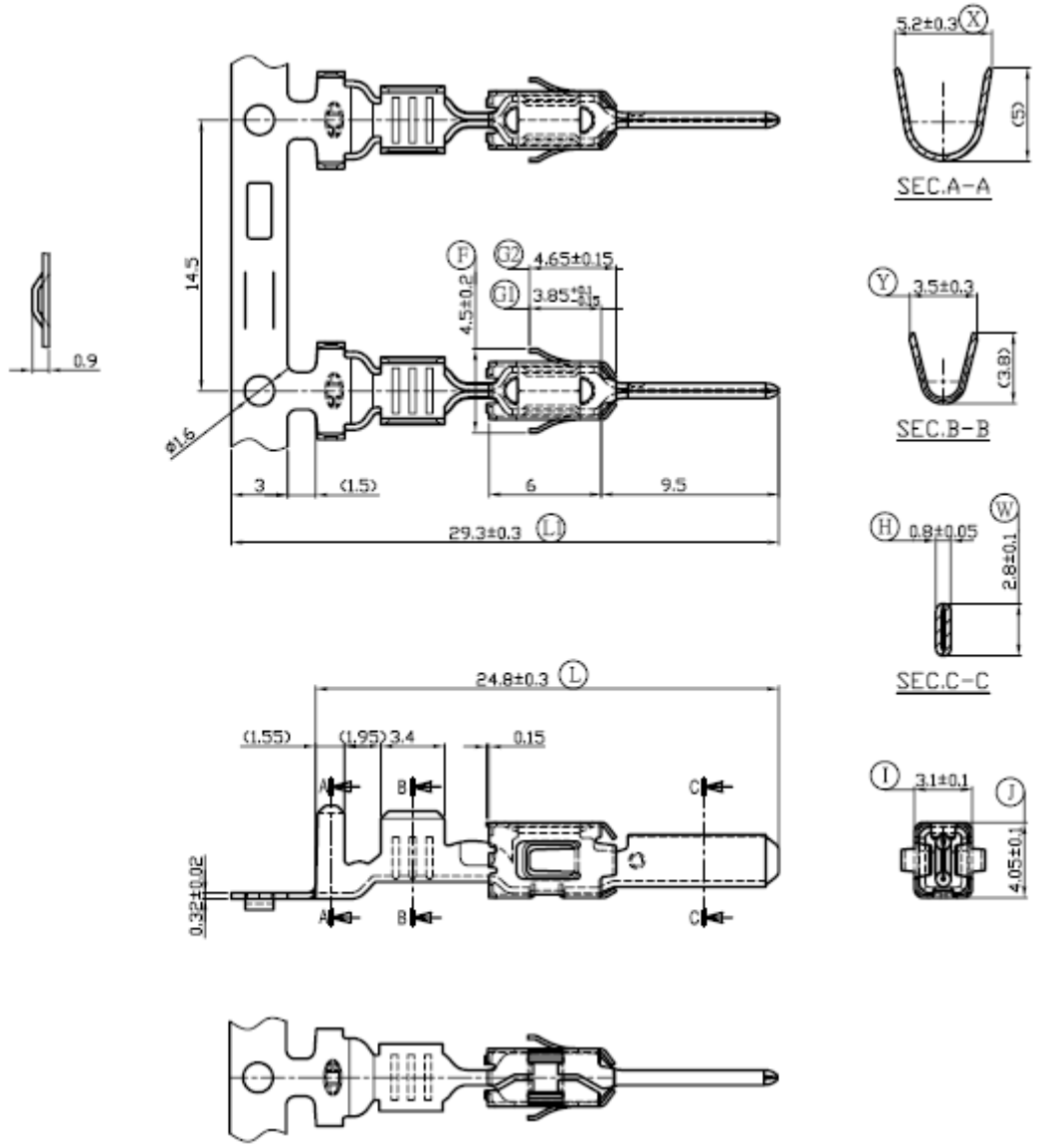
Drawing