PART NO.:	6605652BS0
Material:	Brass
MALE / FEMALE:	Male
Sealed / Unsealed:	Unsealed
Surface Treatment:	L :28 W :6.35 H :0.8 D : E :0
Thickness:	0.4
Wire Range:	0.85~1.25
Quantity per package:	4000

Drawing

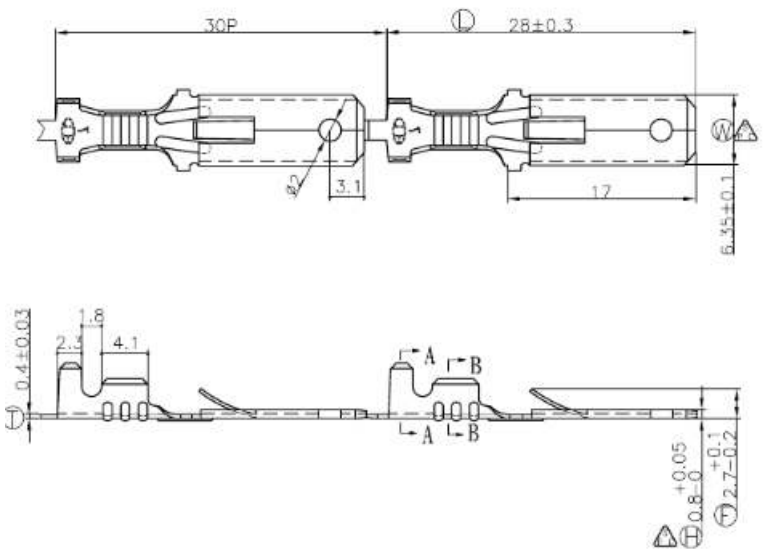

81-370 Gdynia, Skwer Kościuszki 15
tel: +48 58 732 71 62, fax: +48 58 710 27 37, e-mail: info@automotive-connectors.pl

www.automotive-connectors.pl